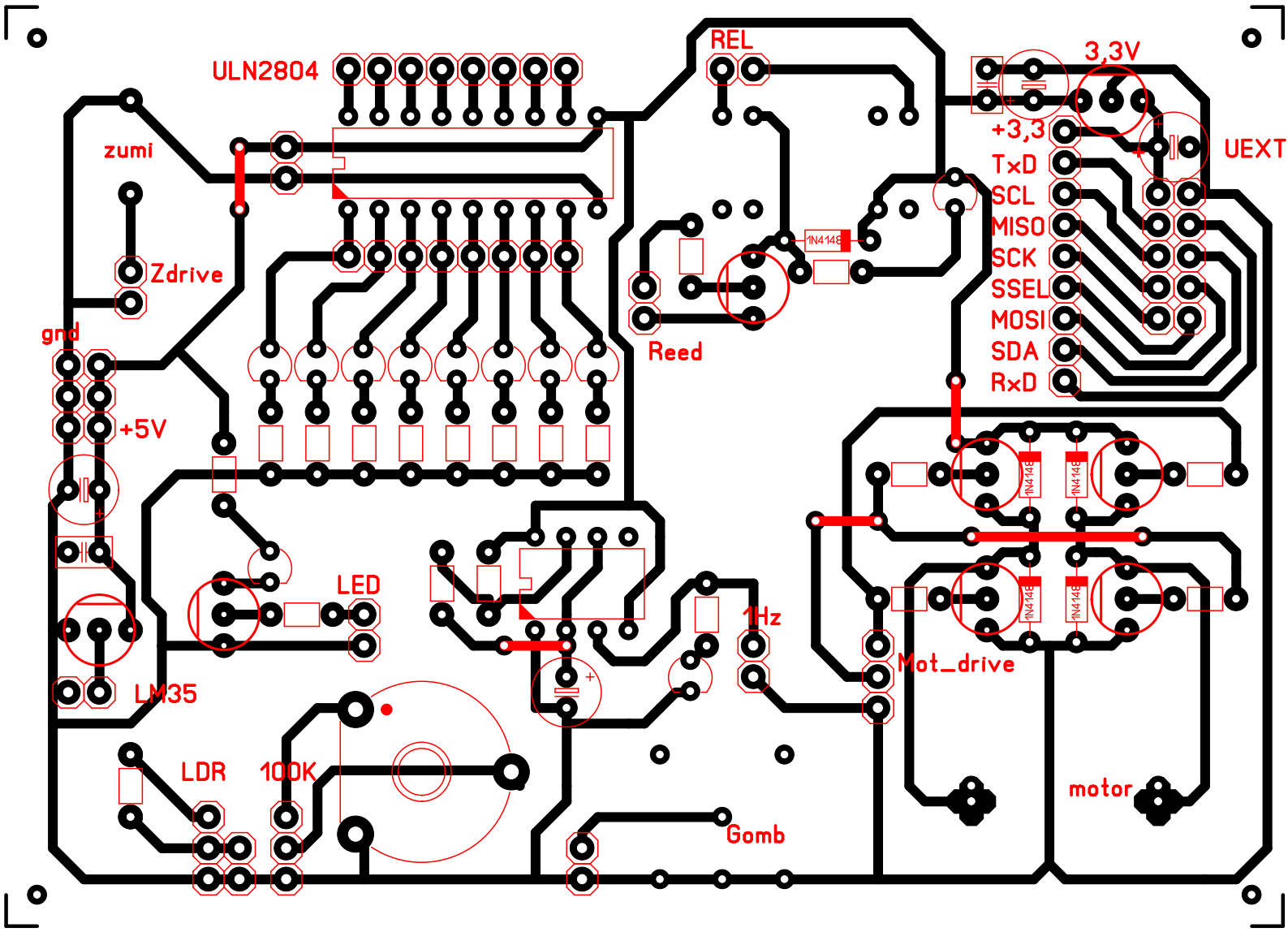
ULN2804
REL
3,3V
+3,3
UEXT
TxD
SCL
MISO
SCK
SSEL
MOSI
SDA
RxD
zumi
Zdrive
gnd
+5V
Reed
1N4148
LED
LM35
LDR
100K
1Hz
Mot_drive
motor
Gomb